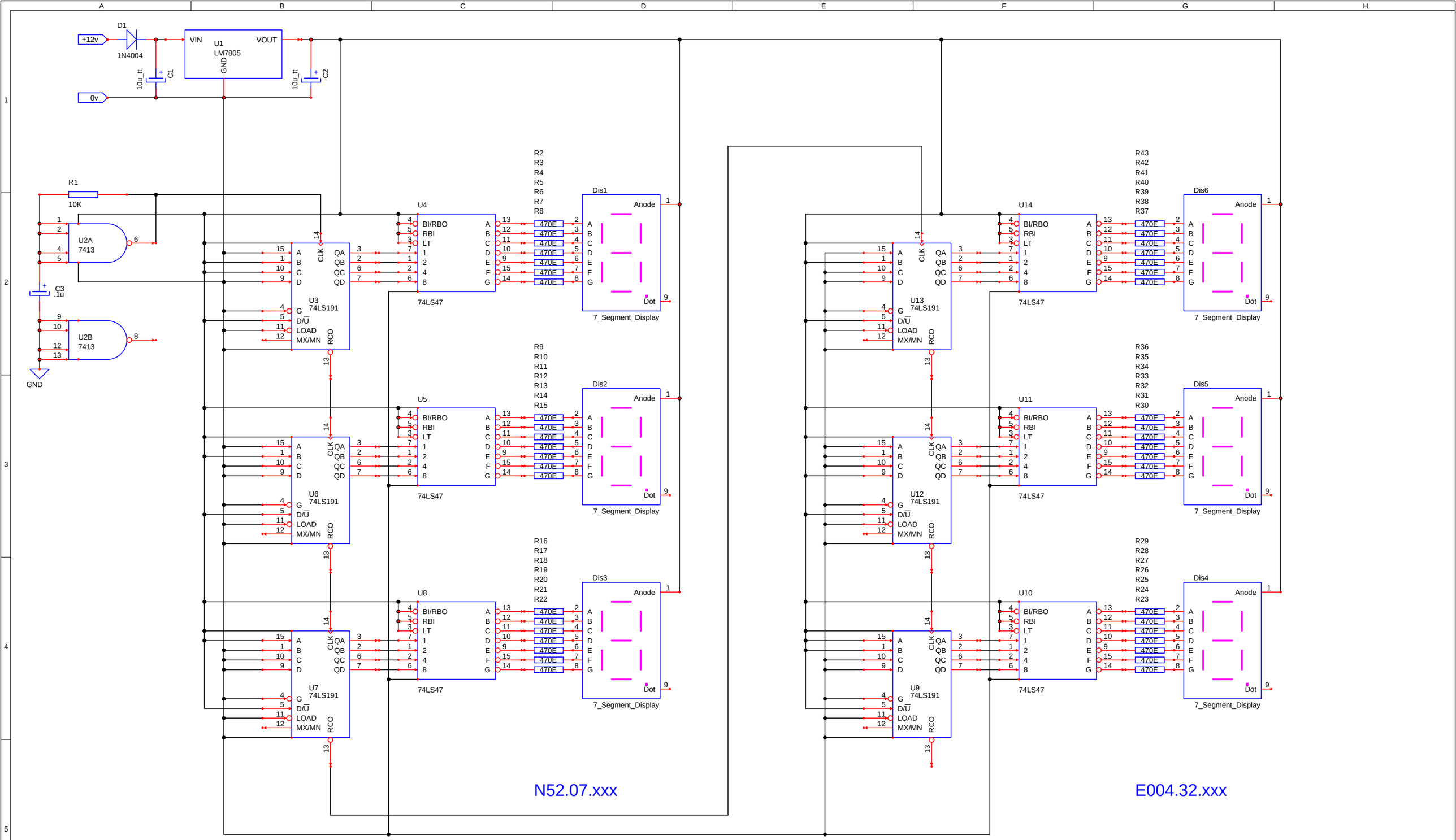


| | | | |
|---|---|---|---|
| PA3DFR | | | |
| Title: | 7 segment display | | |
| Project: GC68MV9 | | File: GC68MV9.sch | Page: 1/1 |
| Number: 20115 | | Date: 2018-03-12 | Rev. : 1.1 |